PARTS

Fence & Cutterhead

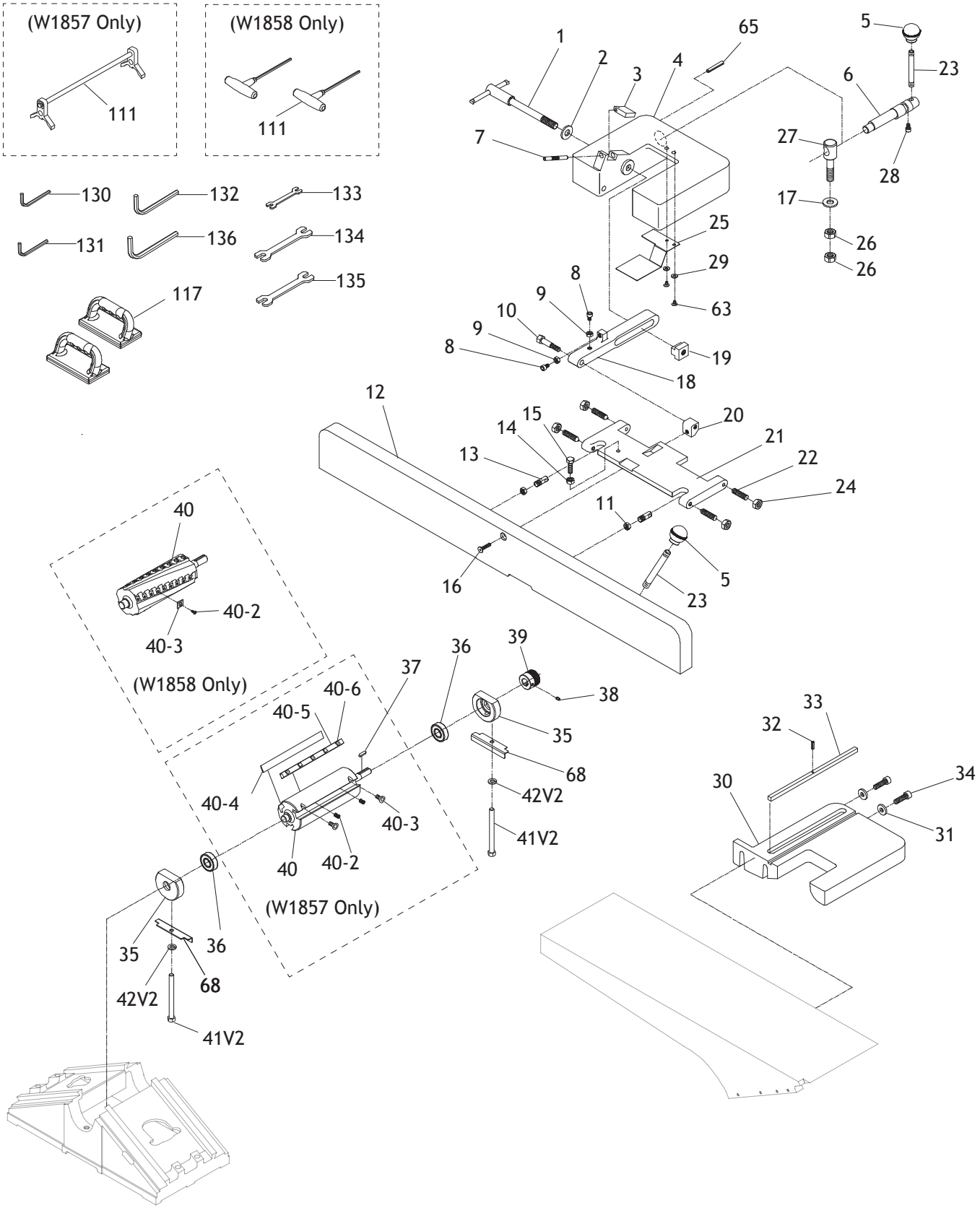

Fence & Cutterhead Parts List

REF	PART #	DESCRIPTION
1	X1857001	FENCE TILT LOCK LEVER 1/2-12
2	X1857002	FLAT WASHER 13MM
3	X1857003	STOP BLOCK
4	X1857004	FENCE CARRIAGE
5	X1857005	BALL KNOB 3/8-16, D1-5/16
6	X1857006	ECCENTRIC SHAFT 3/8-16, 5-1/4L
7	X1857007	DOWEL PIN 5 X 50
8	X1857008	CAP SCREW 1/4-20 X 1-1/4
9	X1857009	HEX NUT 1/4-20
10	X1857010	SHOULDER BOLT 5/16-18 X 11/16, 3/8 X 1
11	X1857011	HEX NUT 1/2-20 THIN
12	X1857012	FENCE
13	X1857013	STUD-SE 1/2-20, 1-3/8, 11/16
14	X1857014	HEX NUT 5/16-18
15	X1857015	HEX BOLT 5/16-18 X 1-1/4
16	X1857016	FLAT HD CAP SCR 5/16-18 X 1-1/2
17	X1857017	FENDER WASHER 1/2
18	X1857018	FENCE LINK
19	X1857019	T-NUT 1/2-12
20	X1857020	FENCE BLOCK
21	X1857021	FENCE SWIVEL BASE
22	X1857022	SET SCREW 3/8-16 X 1-1/2 CONE-PT
23	X1857023	STUD-DE 3/8-16 X 3-1/8, 3/8
24	X1857024	HEX NUT 3/8-16 THIN
25	X1857025	SAFETY PLATE
26	X1857026	HEX NUT 1/2-12
27	X1857027	CAMLOCK STUD 1/2-12 X 1-1/2, 3-1/2L
28	X1857028	CAP SCREW 1/4-20 X 1/2
29	X1857029	FLAT WASHER 1/4
30	X1857030	FENCE BASE
31	X1857031	FLAT WASHER 3/8
32	X1857032	ROLL PIN 4 X 20

REF	PART #	DESCRIPTION
33	X1857033	KEY 9.5 X 9.5 X 268
34	X1857034	CAP SCREW 3/8-16 X 1-1/2
35	X1857035	BEARING BLOCK
36	X1857036	BALL BEARING 6204-2NSE
37	X1857037	KEY 5 X 5 X 30
38	X1857038	SET SCREW M6-1 X 8
39	X1857039	CUTTERHEAD PULLEY
40	X1857040	CUTTERHEAD 8" 4-KNIFE (W1857)
40-2	X1857040-2	COMPRESSION SPRING (W1857)
40-3	X1857040-3	FLAT HD CAP SCR M5-.8 X 12 (W1857)
40-4	X1857040-4	KNIFE 8 X 3/4 X 1/8 HSS (W1857)
40-5	X1857040-5	KNIFE GIB (W1857)
40-6	X1857040-6	KNIFE GIB BOLT 1/4-28 X 1/4 (W1857)
40	X1858040	HELICAL CUTTERHEAD 8" (W1858)
40-2	X1858040-2	FLAT HD TORX SCR T-25 10-32 X 1/2 (W1858)
40-3	X1858040-3	CARBIDE INSERT 15 X 15 X 2.5MM (W1858)
41V2	X1857041V2	HEX BOLT 3/8-24 X 4-1/4 V2.01.21
42V2	X1857042V2	LOCK WASHER 9MM V2.01.21
63	X1857063	PHLP HD SCR 1/4-20 X 1/2
65	X1857065	ROLL PIN 4 X 25
68	X1857068	BEARING BLOCK PLATE
111	X1857111	KNIFE-SETTING JIG (W1857)
111	X1858111	TORX DRIVER T-25 (W1858)
117	X1857117	PUSH BLOCK
130	X1857130	HEX WRENCH 3MM
131	X1857131	HEX WRENCH 4MM
132	X1857132	HEX WRENCH 5MM
133	X1857133	WRENCH 8 X 10 OPEN-ENDS
134	X1857134	WRENCH 12 X 14 OPEN-ENDS
135	X1857135	WRENCH 11 X 13 OPEN-ENDS
136	X1857136	HEX WRENCH 6MM

Tables, Base, Stand & Motor

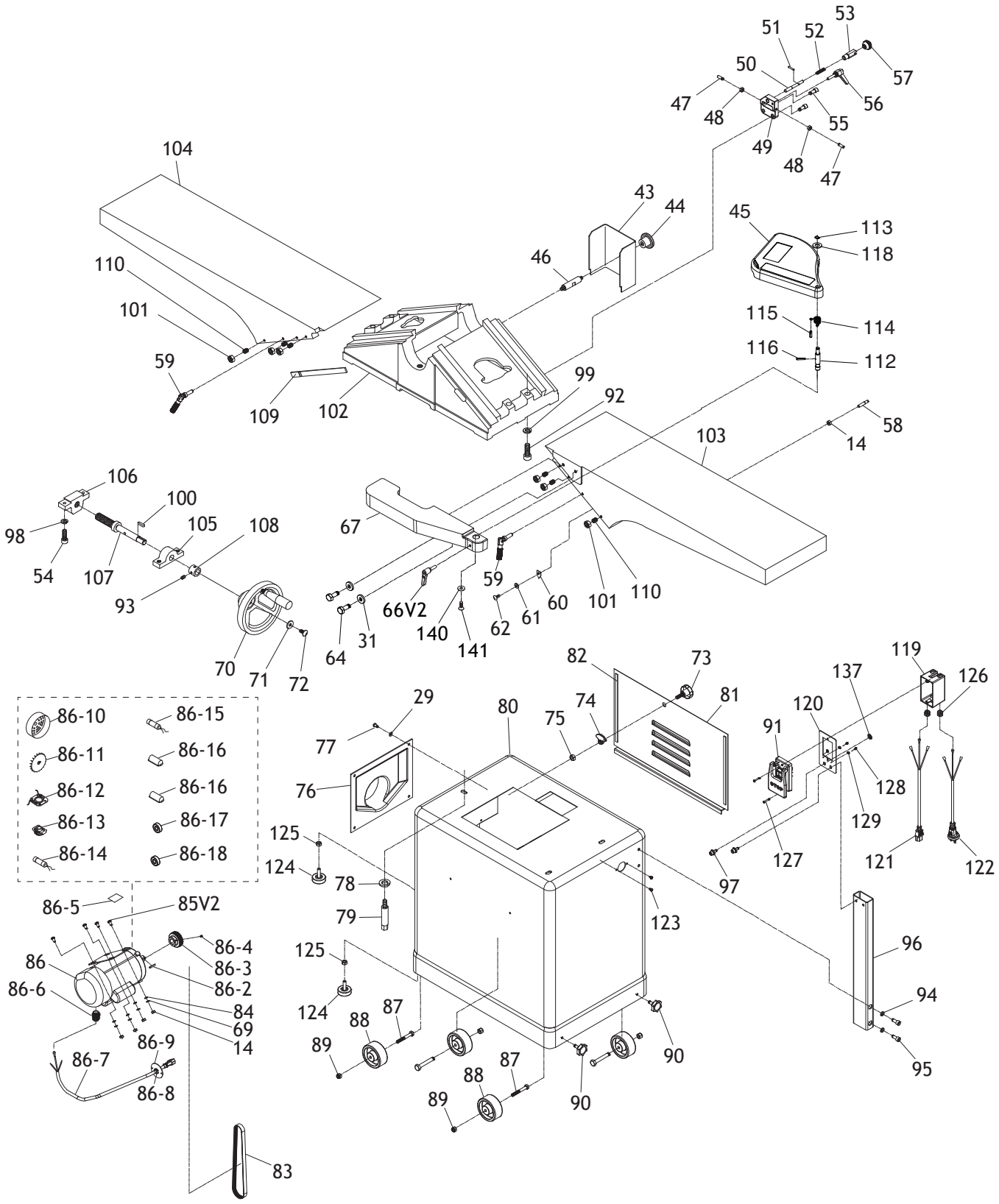

Tables, Base, Stand & Motor Parts List

REF	PART #	DESCRIPTION
14	X1857014	HEX NUT 5/16-18
29	X1857029	FLAT WASHER 1/4
31	X1857031	FLAT WASHER 3/8
43	X1857043	BELT COVER
44	X1857044	KNOB 5/16-18, D1-3/4, ROUND
45	X1857045	CUTTERHEAD GUARD
46	X1857046	STANDOFF-HEX MM 5/16-18 X 3/8, 3
47	X1857047	SET SCREW 1/4-20 X 3/4
48	X1857048	HEX NUT 1/4-20
49	X1857049	DEPTH STOP BLOCK
50	X1857050	SHAFT W/HOLE 2-3/4L
51	X1857051	ROLL PIN 3 X 20
52	X1857052	COMPRESSION SPRING
53	X1857053	SPRING SLEEVE
54	X1857054	CAP SCREW 3/8-16 X 1-1/4
55	X1857055	CAP SCREW 5/16-18 X 3/4
56	X1857056	ADJUSTABLE HANDLE 2L, 1/4-20 X 1
57	X1857057	BALL KNOB 1/4-20, D7/8
58	X1857058	SET SCREW 5/16-18 X 3/4, 1-5/16, SLOTTED
59	X1857059	FOLDING HANDLE 2-1/4L, 5/16-18 X 1-3/16
60	X1857060	SCALE POINTER
61	X1857061	FLAT WASHER 4MM
62	X1857062	PHLP HD SCR 8/32 X 1/4
64	X1857064	HEX BOLT 3/8-16 X 1
66V2	X1857066V2	GUARD LOCK HANDLE V2.07.19
67	X1857067	RABBETING TABLE
69	X1857069	LOCK WASHER 5/16
70	X1857070	TABLE HANDWHEEL W/HANDLE
71	X1857071	FENDER WASHER 8MM
72	X1857072	PHLP HD SCR 5/16-18 X 1/2
73	X1857073	KNOB BOLT 5-LOBE 3/8-16 X 1, D1-3/4
74	X1857074	LATCH
75	X1857075	HEX NUT 3/8-16
76	X1857076	DUST PORT 4"
77	X1857077	PHLP HD SCR 1/4-20 X 1/2
78	X1857078	LOCK WASHER 10MM
79	X1857079	STANDOFF HEX 3/8-16 X 3/4, 3-5/16L
80	X1857080	CABINET STAND
81	X1857081	REAR ACCESS PANEL
82	X1857082	FOAM PAD
83	X1857083	POLY-V BELT 350J7
84	X1857084	FLAT WASHER 5/16
85V2	X1857085V2	CARRIAGE BOLT 5/16-18 X 3/4
86	X1857086	MOTOR 3HP 230V 1-PH
86-2	X1857086-2	KEY 5 X 5 X 30
86-3	X1857086-3	MOTOR PULLEY
86-4	X1857086-4	SET SCREW M6-1 X 8
86-5	X1857086-5	MOTOR LABEL
86-6	X1857086-6	STRAIN RELIEF TYPE-3 PG13.5
86-7	X1857086-7	MOTOR CORD 14G 3W 32"
86-8	X1857086-8	STRAIN RELIEF TYPE-1 3/4"
86-9	X1857086-9	BACKING BOARD
86-10	X1857086-10	MOTOR FAN COVER

REF	PART #	DESCRIPTION
86-11	X1857086-11	MOTOR FAN
86-12	X1857086-12	CONTACT PLATE
86-13	X1857086-13	CENTRIFUGAL SWITCH
86-14	X1857086-14	S CAPACITOR 400M 125V 1-1/2 X 3-1/2
86-15	X1857086-15	R CAPACITOR 70M 250V 1-1/2 X 3-1/2
86-16	X1857086-16	CAPACITOR COVER
86-17	X1857086-17	BALL BEARING 6205ZZ (FRONT)
86-18	X1857086-18	BALL BEARING 6203ZZ (REAR)
87	X1857087	WHEEL AXLE 3/8-16 X 1-3/16, 2-1/2L
88	X1857088	WHEEL
89	X1857089	LOCK NUT 3/8-16
90	X1857090	KNOB BOLT 6-LOBE 5/16-18 X 3/4
91	X1857091	ON/OFF BUTTON KEDU KJD17B-230V-S
92	X1857092	CAP SCREW 1/2-12 X 1-3/4
93	X1857093	SET SCREW 1/4-20 X 1/4
94	X1857094	LOCK WASHER 8MM
95	X1857095	CAP SCREW M8-1.25 X 70
96	X1857096	SWITCH PEDESTAL
97	X1857097	CAP SCREW M8-1.25 X 20 W/WASHERS
98	X1857098	LOCK WASHER 3/8
99	X1857099	LOCK WASHER 1/2
100	X1857100	KEY 5 X 5 X 22
101	X1857101	HEX NUT 5/16-18
102	X1857102	TABLE BASE
103	X1857103	INFEED TABLE
104	X1857104	OUTFEED TABLE
105	X1857105	LEADSCREW SUPPORT
106	X1857106	LEADSCREW BRACKET
107	X1857107	LEADSCREW
108	X1857108	LEADSCREW COLLAR
109	X1857109	TABLE GIB
110	X1857110	SET SCREW 5/16-18 X 1-1/4 CONE-PT
112	X1857112	GUARD PIVOT SHAFT
113	X1857113	EXT RETAINING RING 11MM
114	X1857114	TORSION SPRING
115	X1857115	ROLL PIN 6 X 28
116	X1857116	ROLL PIN 5 X 28
118	X1857118	FLAT WASHER 12MM
119	X1857119	SWITCH BOX
120	X1857120	SWITCH PLATE
121	X1857121	SWITCH CORD 14G 3W 20"
122	X1857122	POWER CORD 14G 3W 10' 6-20P
123	X1857123	TAP SCREW M6 X 8
124	X1857124	ADJUSTABLE FOOT M8-1.25
125	X1857125	HEX NUT M8-1.25
126	X1857126	STRAIN RELIEF TYPE-1 5/8"
127	X1857127	PHLP HD SCR M4-.7 X 25
128	X1857128	PHLP HD SCR M4-.7 X 6
129	X1857129	EXT TOOTH WASHER 4MM
137	X1857137	GROUND LABEL
140	X1857140	FENDER WASHER 6.7 X 19 X 2MM
141	X1857141	BUTTON HD CAP SCR M6-1 X 12

Labels & Cosmetics

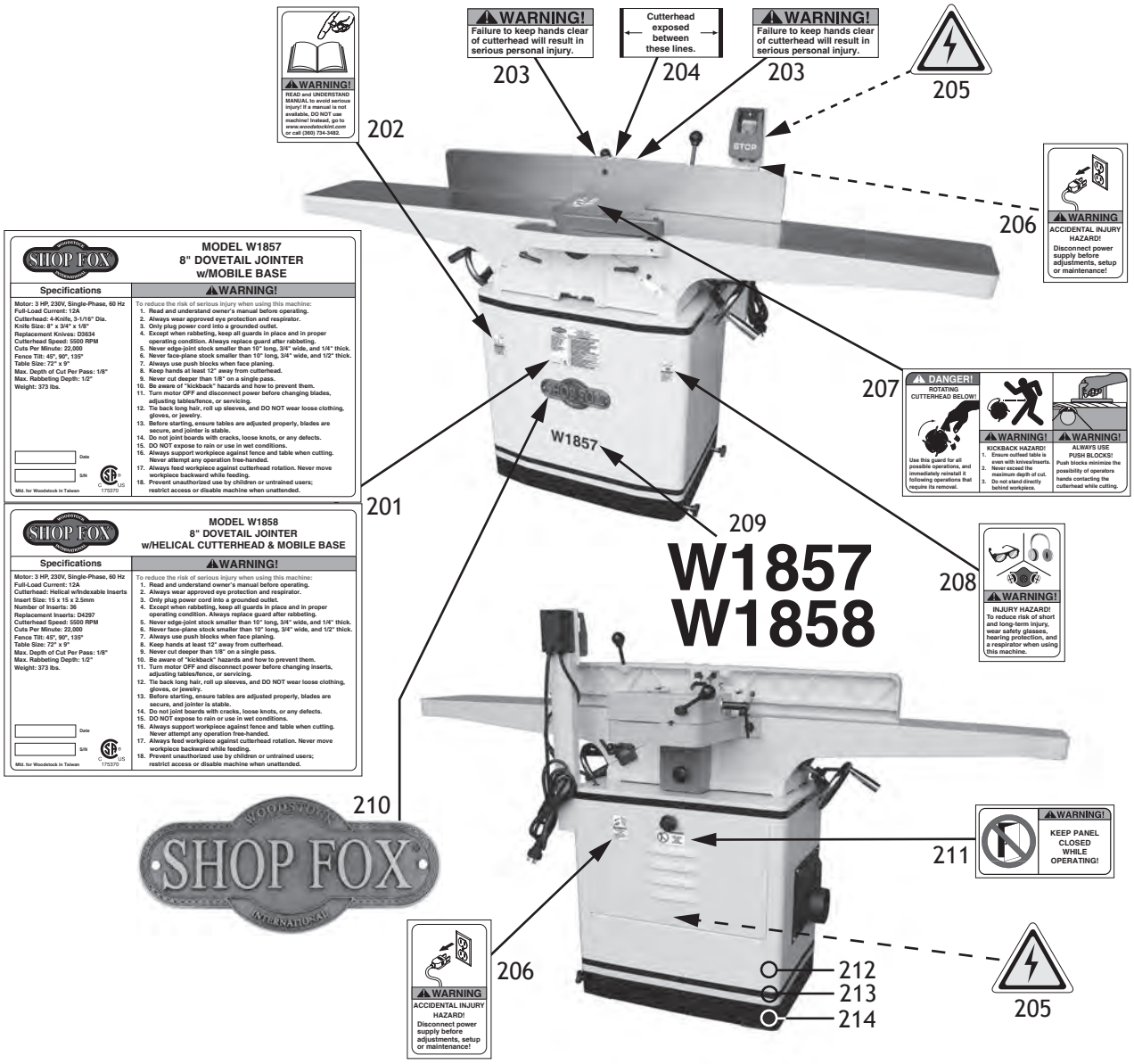

REF	PART #	DESCRIPTION
201	XP1857201	MACHINE ID LABEL (W1857)
201	XP1858201	MACHINE ID LABEL (W1858)
202	XP1857202	READ MANUAL LABEL
203	XP1857203	CUTTERHEAD WARNING LABEL
204	XP1857204	CUTTERHEAD EXPOSED LABEL
205	XP1857205	ELECTRICITY LABEL
206	XP1857206	DISCONNECT POWER LABEL
207	XP1857207	CUTTERHEAD GUARD LABEL

REF	PART #	DESCRIPTION
208	XP1857208	EYES EARS LUNGS WARNING LABEL
209	XP1857209	MODEL NUMBER LABEL (W1857)
209	XP1858209	MODEL NUMBER LABEL (W1858)
210	XP1857210	SHOPFOX NAMEPLATE-LARGE
211	XP1857211	PANEL CLOSED WARNING LABEL
212	XP1857212	TOUCH-UP PAINT, SHOP FOX WHITE
213	XP1857213	BLACK TRIM TAPE
214	XP1857214	TOUCH-UP PAINT, SHOP FOX BLACK

⚠WARNING

Safety labels warn about machine hazards and how to prevent serious personal injury. The owner of this machine MUST maintain the original location and readability of all labels on this machine. If any label is removed or becomes unreadable, REPLACE that label before allowing machine to be operated again. Contact us at (360) 734-3482 or www.woodstockint.com to order new labels.