Model D4775
Resaw Drift Bar
Instruction Sheet

Phone #: (360) 734-3482 • Online Tech Support: tech-support@shopfox.biz • Web: www.shopfox.biz

Introduction

The Model D4775 Resaw Drift Bar is designed to help reduce blade lead (cut drift) by creating a pivot point on the resaw fence that provides more control during resaw operations. It can be installed on any resaw fence at least 5 7/8" tall.

NOTICE

Installation of Model D4775 requires permanent modification of your resaw fence! Before installing Model D4775, make sure blade guides clear the top of resaw fence by at least 1/2".

Figure 1. Model D4775 Resaw Drift Bar.

Specifications

Weight	2 lbs.
Dimensions	6 1/4"L x 1 1/4"D
Minimum Fence Height	5 7/8"

Items Needed

Drill w/Guide or Drill Press	1
Drill Bit 3/8"	1
Center Punch	1
Tape Measure	1
Erasable Marker	1

Installation

1. DISCONNECT MACHINE FROM POWER!

2. Install a blade suitable for resaw operations. We suggest widest possible blade for your machine with 2–4 TPI (hook or skip teeth) that is sharp and clean.

3. Install resaw fence and move it up to blade. If resaw fence is adjustable forward/back, make sure blade is centered lengthwise on resaw fence.

4. Mark top of resaw fence exactly 1/4" forward of blade teeth (see **Figure 2**).

5. Mark a point exactly 13/16" below mark made in **Step 4** (see **Figure 2**).

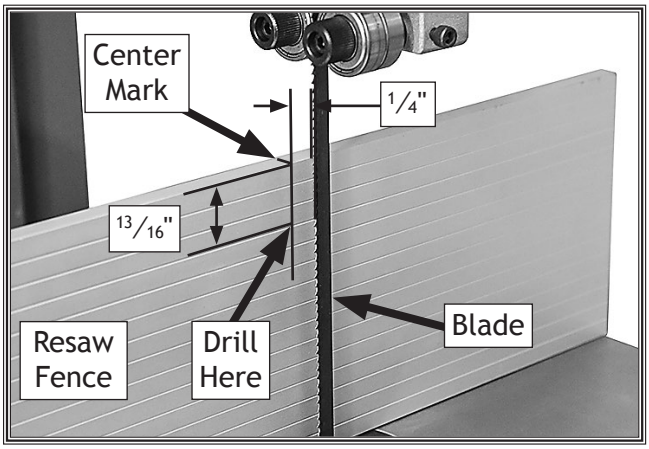

Figure 2. Location of center mark and hole point.

COPYRIGHT © SEPTEMBER, 2017 BY WOODSTOCK INTERNATIONAL, INC.
WARNING: NO PORTION OF THIS MANUAL MAY BE REPRODUCED IN ANY SHAPE OR FORM WITHOUT THE WRITTEN APPROVAL OF WOODSTOCK INTERNATIONAL, INC.
#19184ES Printed in Taiwan

6. Remove resaw fence from bandsaw.

7. Use center punch to score a point at mark made in **Step 5** and drill 3/8" hole through resaw fence.

   Note: *Use drill press or handheld drill with guide to make sure hole is drilled perpendicular to resaw fence.*

8. Insert adjustable handle with washer through back of resaw fence. (See **Parts Breakdown** drawing for reference.)

9. Make sure drift bar is flat against resaw fence and straight up and down.

Operation

1. Install resaw fence with drift bar.

2. Mark cut line from front to back on top of workpiece (see **Figure 3**).

3. Lower bandsaw blade guides as close to workpiece as possible (see **Figure 3**).

4. Adjust resaw fence so blade aligns with mark made in **Step 2** and center of drift bar is set 1/4" forward of blade teeth (see **Figure 3**).

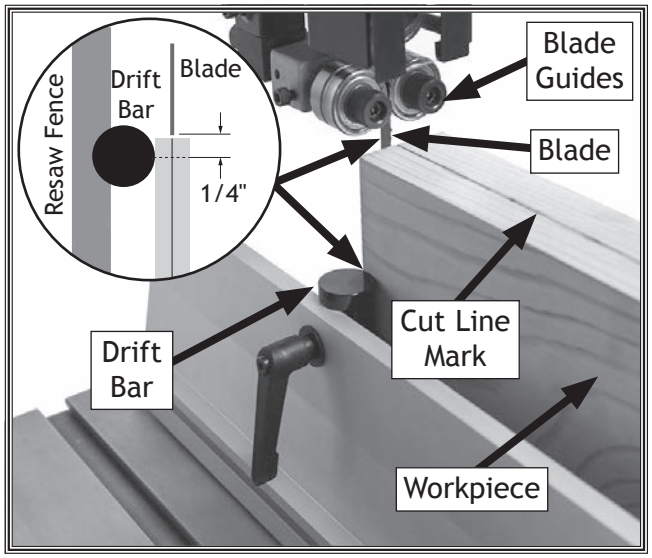

Figure 3. Positioning workpiece for cut using drift bar.

5. Lock rip fence and resaw fence in position.

6. If necessary for cutting operation, support ends of board with saw stand or roller stand.

7. Turn bandsaw ***ON***.

8. Slowly feed workpiece completely through blade. Use drift bar as a pivot point to control cut, as shown in **Figure 4**.

   Note: *The drift bar allows you to steer your workpiece while cutting to quickly correct blade lead and keep blade aligned with cut line.*

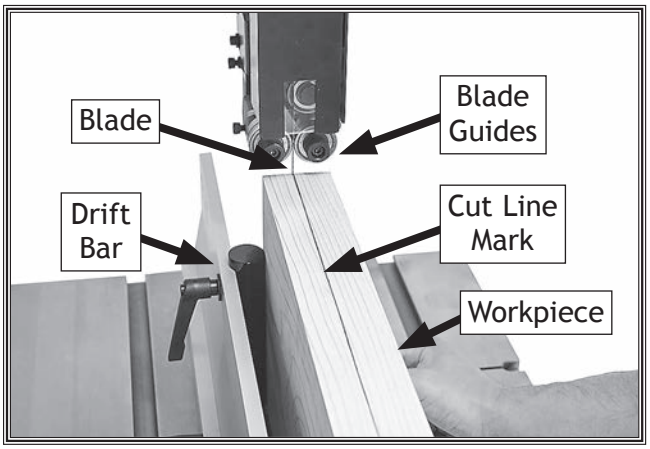

Figure 4. Resawing with drift bar.

Parts Breakdown

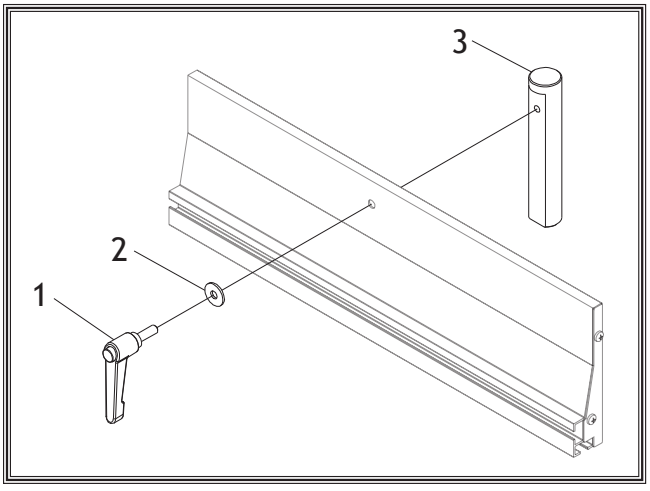

REF	PART #	DESCRIPTION
1	XD4775001	ADJ HANDLE 65L, M8-1.25 X 25
2	XD4775002	FENDER WASHER 8MM
3	XD4775003	RESAW DRIFT BAR 6-1/4" X 1-1/4"